Loan Container Incoming Inspection

VADER® Pedicle System Rod-2-size

confidential, property of icotec ag, Switzerland

Overview Instrumentation

42-890-1

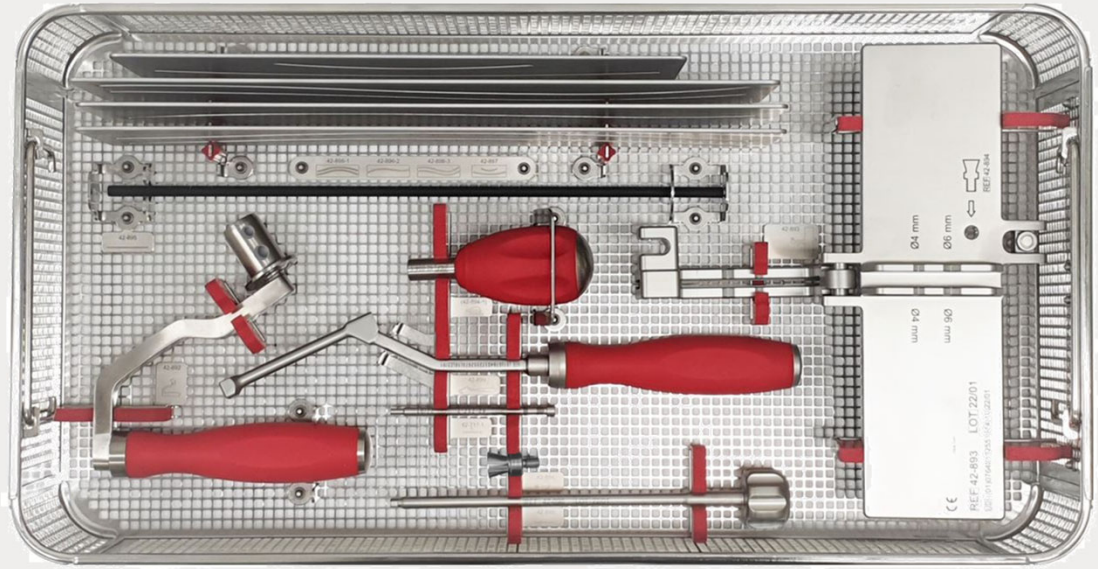

Overview Inspection Aids

- **Saw blade (H291)**
- **BlackArmor® rod – cut Ø 6 mm rod (H292)**

General Control

- **Do the contents of the container correspond to the kit profile?**
- **Are the instruments intact (not clearly damaged)?**
- **Is the laser marking legible/the data matrix code visible?**
  - Instruments where the laser marking is no longer legible must be replaced.
  - Instruments where the data matrix code (UDI) is no longer visible must be replaced. (When available, a scanner can be used to check the data matrix code.)

- **Movable parts/joints – maintenance using surgical instrument oil!**

  → **Functional inspections for instruments** (see following pages)

- **If an instrument is replaced, all tests involving this instrument have to be repeated.**
- **Instructions for Reprocessing: 0191US, 0240US, 0241US, 0267US**

Functional Inspection

- **Handle with ¼“ Coupling (42-892)**
  - Movable parts/joints – maintenance using surgical instrument oil!
  - Handles with couplings: lubricate all movable parts; repeatedly operate the coupling to ensure proper functionality.
  - Functional inspection: ensure the ¼“ coupling and the saw blade adapter (42-891) connect and function properly (H291).

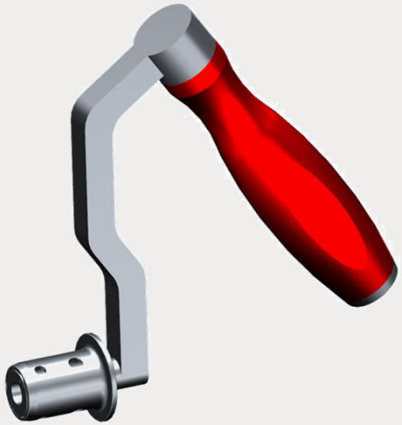

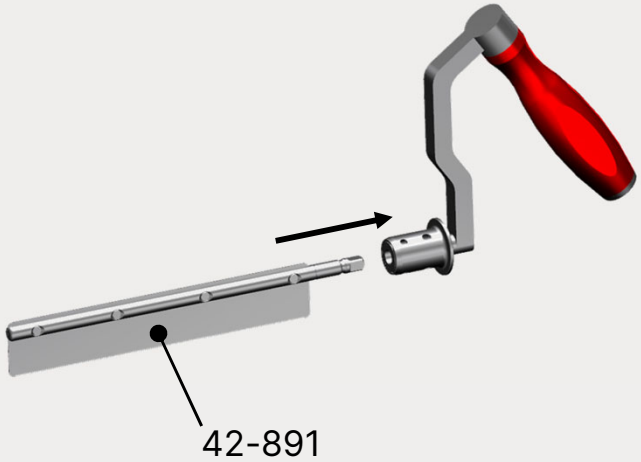

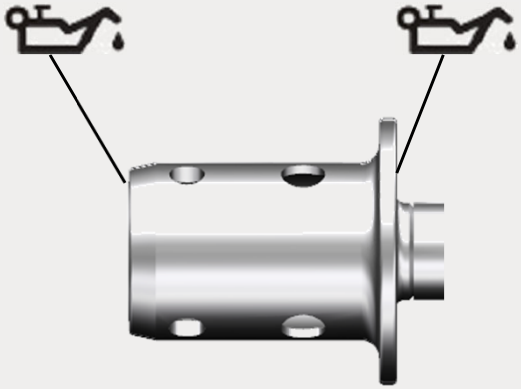

Functional Inspection

- **Fixation Device (42-893)**
  - Movable parts/hinges/joints – maintenance using surgical instrument oil!
  - Lubricate the sliding surface; then operate the movable parts several times to ensure proper functionality.
  - Visual inspection: threaded bore is free from residues.
  - Functional testing:
    - Deburring tool (42-894) can be mounted/screwed onto fixation device.
    - Fixation of a BlackArmor® rod – cut Ø 6 mm rod (H292). Rod must be fully clamped in position.

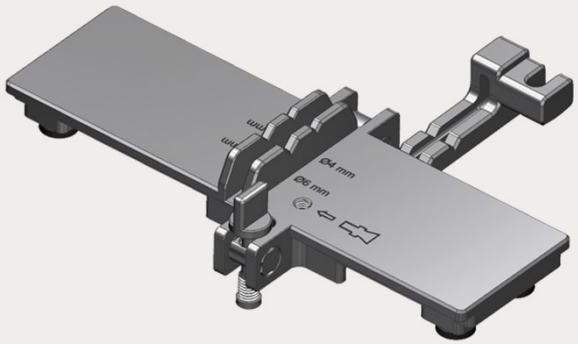

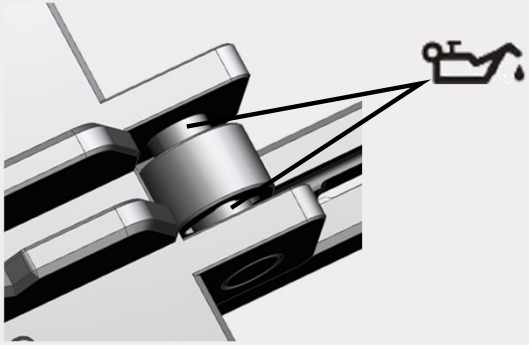

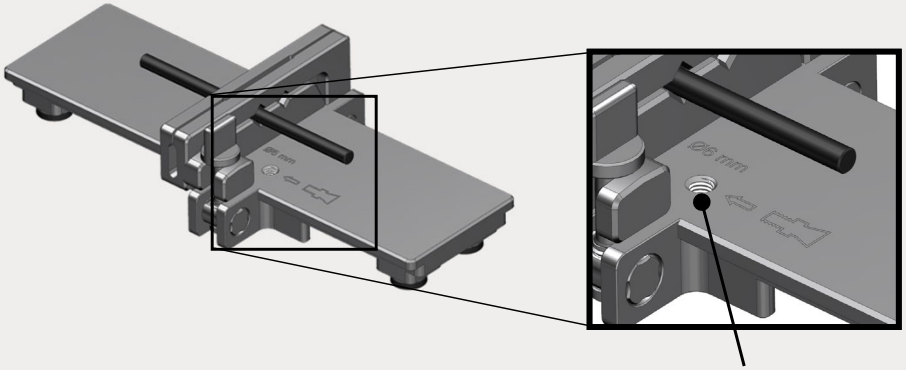

Threaded bore

Functional Inspection

- **Deburring Tool (42-894)**
  - Visual inspection:
    - Are the three cutting edges free of burrs, nicks, or visible damage?
    - Is the threaded geometry free from residues?

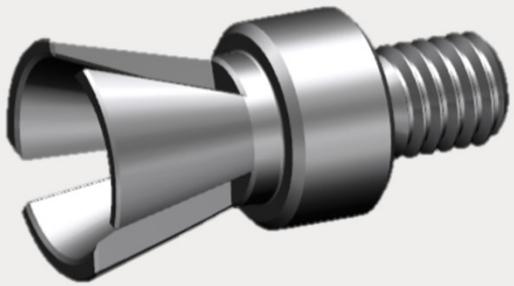

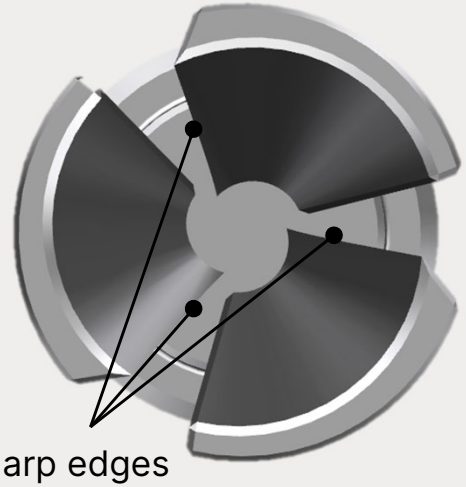

Functional Inspection

- **Handle for Deburrer (42-894-1)**
  - Visual inspection:
    - Threaded bore is free from residues.
  - Functional testing:
    - Deburring tool (42-894) can be mounted/screwed onto handle.

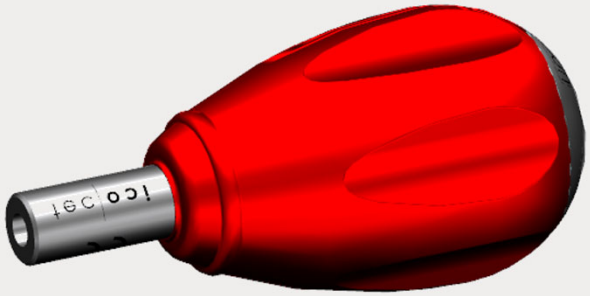

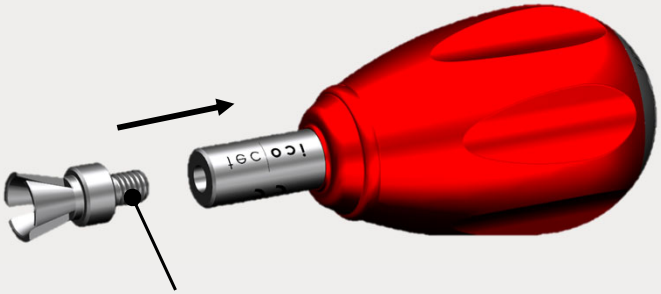

Functional Inspection

- **Trial Rod, Flexible (42-895)**
  - Visual inspection of laser marking of the scale
  - Are the laser markings legible?

Functional Inspection

- **Template for HT S-Rods (42-896-1)/TL S-Rods (42-896-2)/ L S-Rods (42-896-3)/R120 & R450 Curved Rods (42-897)**
  - Visual inspection: templates are not bent and lie flat on the table.
  - Visual inspection: laser marking of type and reference number (recess) must be clear and legible.

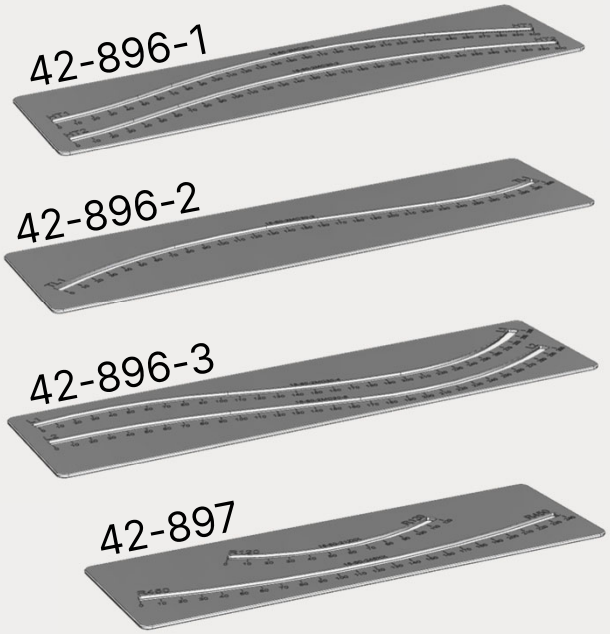

Reference number of template	Laser marking type	Laser marking reference number (recess)
42-896-1	HT1 HT2	16-60-2MC30-1 16-60-2MC30-2
42-896-2	TL1	16-60-2MC30-3
42-896-3	L1 L2	16-60-2MC30-4 16-60-2MC30-5
42-897	R120 R450	16-60-212XX 16-60-245XX

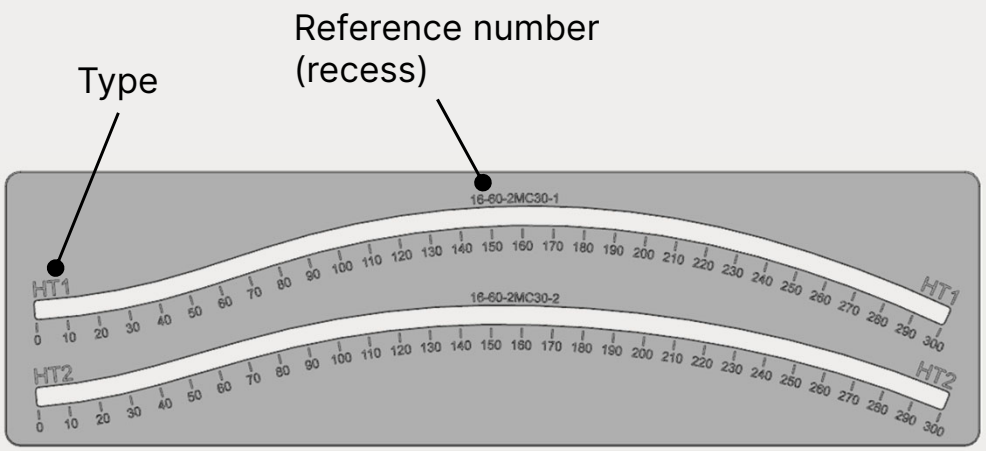

Functional Inspection

- **Rod Inserter, for Cut Rods (42-899)**
  - A BlackArmor® rod – cut Ø 6 mm rod (H292)(without MIS interface) can be inserted into rod inserter and secured with fixation screw (42-717-1) by using the hexagon screwdriver (42-898). Rod must be fully fixated.

Rod inserter, for cut rods (42-899)

- **Hexagon Screwdriver (42-898)**
  - The distal tip of the driver is still intact (no significant signs of wear) and fits into fixation screw (42-717-1).

Hexagon screwdriver (42-898)

- **Fixation Screw (42-717-1)**
  - The distal tip of the fixation screw is still intact (no significant signs of wear).
  - The proximal end of the fixation screw is free of bioburden (no significant signs of wear).

Fixation screw (42-717-1)

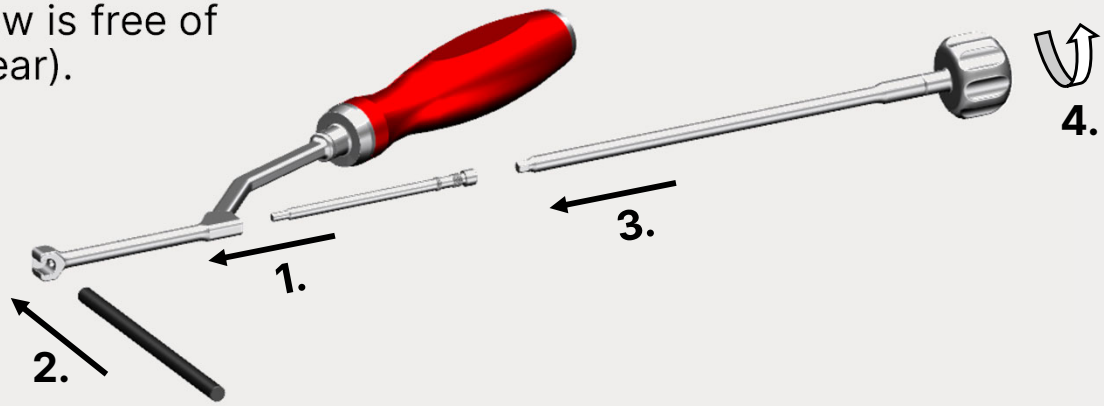

0263US.2025-08